Analytical and Experimental investigation of Magnetorheological Fluid in Hydrodynamic journal bearing

Sagar N. Bhore, *ME (student) Mechanical design*, Niranjan D. Khaire, *Assistant Professor (Mechanical Engineering department)*

***Abstract*— The use of smart lubricants like magnetorheological (MR) fluid is always considered to be a promising field of realizing smart bearings with semi –active controllable capability. The smart lubricant changes the properties such as viscosity in real time application. By using the smart lubricant such as MR fluid the bearing behavior can be control in real time application as per the requirement. There are very few studies are available on MR fluid in hydrodynamic journal bearing by using the Herscel-Bulkley model. In the present work adopts the Herschel –Bulkely model fluid model to describe the rheological behavior of MR fluid. The mathematical analysis shows that the by using MR fluids the load carrying capacity and life of the bearing increases. The mathematical results are verified with experimental results.**

***Index Terms*— Magnetorheological fluid, Hydrodynamic journal bearing, Herschel-Bulkley model, shear stress, viscoplastic lubrication theory.**

I. Introduction

THE hydrodynamic lubricated bearings are common in industry applications. The oil film produced by journal rotation is the key factor for generating forces to support the shaft load and avoid touching the shaft to the bearing surfaces. Theories and experiments both reveal that the one crucial property of the lubricant itself is in determining load carrying capacity of bearing is its viscosity, along with thermo elastic effects and surface deformation. In industrial applications, common lubricants like oil are usually considered to have constant viscosities at constant temperature. Change of some factors like temperature and pressure can lead to the change of viscosity, but it is passive and uncontrollable.

Modern applications, however, often require the rotor system to be 'smart', meaning that its performance could be controlled to meet various working conditions. Bearings lubricated with smart materials are therefore studied, aiming to achieve the different working loading conditions.

This work is supported by the private firm, under confidentiality agreement; the name of the firm cannot be disclosed".

Sagar N. Bhore is student of M.E Design Mechanical Engineering Department, Rajarshi Shahu College Of Engineering, Tathwade, Pune-33. India (e-mail: sagarbhore@yahoo.com).

Niranjan D. Khaire, Assist.Professor, Department of Mechanical Engineering, Rajarshi Shahu College of Engineering, Tathwade, Pune-33. India.(e-mail: niranjankhaire@rediffmail.com).

The detail investigation, it can be seen that there are three stages of operation in hydrodynamic journal bearing -

- Starting – No hydrodynamic action- due to low speed
- Running – Hydrodynamic action – due to high speed
- Stopping - Low hydrodynamic action- due to decreasing speed.

Due to no hydrodynamic actions, during starting and stopping, there is possibility of metal to metal contact and during the running condition, the oil viscosity decreases due to temperature rise and also possibilities of metal to contact; this can be avoided by changing the viscosity of MR fluid. Because of their quick response and reliability, electrorheological (ER) fluid and magnetorheological (MR) fluid are mostly used as smart lubricant. Without external electric field or magnetic field (off state), both fluids can be treated as Newtonian fluids. When external electric or magnetic field is applied, these two fluids exhibit viscoplasticity, categorizing them as non-Newtonian fluids. The alteration of viscosity in two different states could thus be used to actively control both static and dynamic behavior of hydrodynamic bearings. However, since the application of ER fluid requires very high currents and the yield stress of it at on state is relatively low, MR fluid is more applicable.

In present study, by using viscoplastic lubrication theory, the load carrying capacity of bearing determined by analyzing shear stresses and verified with the experimental results.

II. Abbreviations

B	-Bingham number
B_L	-Width of bearing (m)
C_b	-Radial clearance (m)
D	-Integral region
e	-Eccentricity ratio
h	-Oil film thickness (m)
H	-Characteristics length in Y- direction (m)
K	-Herschel-Bulkley model parameter
L	-Characteristics length in X-direction (m)
n	- Herschel-Bulkley model parameter
P	- Oil film pressure (Pa)
Q	- Dimensionless flux at θ=0

R_b	- Bearing radius (m)
R_j	- Journal radius (m)
t	- time (s)
U	- Velocity in X-direction (m/s)
V	- Velocity in Y-direction(m/s)
x_0	- Point at which oil film pressure and pressure gradient both reach zero
Y	- Y Coordinates of the oil film boundary (m)
θ	- Bearing Angle (rad)
θ_0	- Point at which oil film pressure and pressure gradient both reach zero (rad)
ω_j	- Journal rotating speed (rad/s)
τ	- Shear stress (Pa)
τ_0	- Yield shear stress
μ	- Dynamic viscosity of Newtonian fluid (Pa.s)
Γ	- Shear rate as a function of shear stress (s^{-1})
σ	- Indicative Shear stress (Pa)
1	- Subscript, indicates the inner surface of bearing
2	- Subscript, indicates the journal surface

III. LITERATURE REVIEW

Modern applications, however, often require the rotor system to be 'smart', meaning that its performance could be controlled to meet various working conditions. Bearings lubricated with smart materials are therefore studied, aiming to actively adjust the stiffness and damping the bearing provided thus to control the behavior of the whole rotor system. Because of their quick response and reliability, electrorheological (ER) fluid [1, 2] and magnetorheological (MR) fluid [3-7] are mostly used as smart lubricant. Without external electric field or magnetic field (off state), both fluids can be treated as Newtonian fluids. When external electric or magnetic field is applied, these two fluids exhibit viscoplasticity, categorizing them as non-Newtonian fluids. The alteration of viscosity in two different states could thus be used to actively control both static and dynamic behavior of hydrodynamic bearings. However, since the application of ER fluid requires very high currents and the yield stress of it at on state is relatively low, MR fluid is more applicable.

The Bingham model has been mainly used to describe the rheological behavior of lubricants. [3-5, 7, 8]. This model holds that the viscoplastic material behaves as a rigid body at low stresses but starts to flow as a viscous fluid at a threshold level of shear stress. Bingham model is firstly used to model grease lubricants which possess similar rheological behavior as ER and MR fluids. Studies were first carried out by Cohen and Oren [9] and Milne [10] to investigate grease lubricated bearings both experimentally and analytically. Pseudo-plastic cores in the oil film were demonstrated. Based on the Bingham theory, Wada et al. [8] developed a general theory to describe the core behavior in a finite length bearing and then applied to a one dimension situation. Tichy [7] proposed a simplified Bingham-based explicit Reynolds equation to model behavior of Bingham fluid in thin films, and then applied it to journal bearing and squeeze film damper. Zhanget al. [2] numerically studied a journal bearing lubricated with ER fluid by using the Bingham model, and concluded that the apparent viscosity and yield stress together determined the bearing behavior at high shear rates. Nikolakopoulos [1] studied a ER fluid lubricated bearing experimentally and analytically in a macroscopic way without discussing the rheology in oil film, and concluded that ER fluid could be used as smart bearing lubricant to control vibration. Kim and Seireg [11] carried out a thermohydrodynamic analysis of slider and journal bearings with Bingham lubricant, observing that the shear zone thickness was significantly smaller than the oil film thickness. Zhang [12] performed a TEHD analysis of a non-Newtonian fluid lubricated journal bearing with the power law model. He found that the shear-thinning effect decreased the oil film pressure while at the same time lowered film temperature. MR fluids are also applied in other types of bearings like hydrostatic bearing and thrust bearing. Hessbelch and Abel-Keilhack [5] used MR fluid in hydrostatic bearing to maintain a constant bearing gap for various payloads thus overcomes the disadvantage of this kind of bearings. Bouyahis and Hajjam [13] adopted the generalized Reynolds equation to describe non-Newtonian flow in a tilting-pads thrust bearings.Static parameters such as load capacity, friction torque and power loss were calculated. More recently, Gertzos et al. [4] and Bompos and Nikolakopoulos [3] investigated the rheological property and static characteristics of MR fluid lubricated bearing with CFD codes. Gertzos et al. [4] showed the three-dimensional rheological phenomenon in the bearing oil film. Urreta et al. [14] compared behavior of bearing lubricated with ferrofluid and MR fluid experimentally and numerically, concluding that ferrofluid was not appropriate for a smart bearing for lack of enough MR effect while MR fluid achieved good performance in controlling at low journal speed. Průša and Rajagopal [15] assumed a ER fluid with no yield stress and then used two material model for the constitutive relationships of Cauchy stress tensor. They established a full three-dimensional ER fluid model and found that behavior in three dimension differed from that in one or two dimension. Bingham model assumes that the viscosity remains constant when shear stress exceeds yield stress. Experiments [16, 17] show, however, for common ER and MR fluids, viscosity decreases as shear rate increases. To incorporate this phenomenon a more general Herchel-Bulkley (HB) model is introduced. Wang et al [18] studied ER and MR fluids using the HB model. Their experimental results show that in low magnetic field strength, ER and MR fluids behave like Bingham fluid while in high magnetic field they behave like HB fluid, showing the effect of either shear-thinning or shear-thickening. Amalraj [19] analyzed a pressurized thrust bearing lubricated with MR fluid using HB model, taking into consideration of inertia effect. He concluded that high HB model numbers enhanced the bearing performance, and the fluid inertia effect was only significant when HB model numbers were low. Hewitt and Balmforth [6] developed a general viscoplastic lubrication theory with HB model and applied it to bearing and washboard instability of a plate, achieving good agreement with experiments.

IV. OBJECTIVES

The bearing failures investigation shows that the rotating journal touches and wears out the inner surface of the bearing. The main cause of the failure is due to-

- During starting and stopping condition, oil pressure and viscosity is not sufficient to avoid the metal to metal contact.
- Variation in Load and Vibration more than the acceptable level may cause into breaking of oil film thickness and results in metal to metal contact.
- During the running condition the temperature of the oil increases, results into the decreasing of the viscosity and load carrying capacity of the bearing.

The objectives of this research work is-

- To investigate the use of the lubricant which viscosity can be vary according to the requirement.
- By increasing the viscosity to increase the load carrying capacity and speed of bearing.
- To improve overall life of the bearings.

V. SCOPE

The above problem can be addressed by using the Smart Lubricant, the smart lubricant are those which will changes the properties according to the requirement. The non Newtonian lubricant also varies the apparent viscosity as per the requirement. Following are the various non Newtonian fluids available –

- Ferro fluid
- Electro rheological fluid
- Magneto rheological fluid

All these fluids vary their apparent viscosities as per the electric and magnetic field variation. We will restrict the scope of our work to Magneto rheological fluid to be used in hydrodynamic journal bearing.

VI. METHODOLOGY

The Magneto rheological fluid considers in hydrodynamic journal bearing, the MR fluid has high apparent viscosity when it comes under the magnetic field. The advantage of this property is useful for further investigation. The MR fluid behaves like non Newtonian fluid and follows the two types of model.

- Bingham plastic flow model
- Herschel-Bulkley fluid model.

In this research, the Herschel-Bulkley fluid model is considered in hydrodynamic journal bearing. The fluid model is investgated theoretically and validates it by experimentally. The viscoplastic lubrication theory is used for the investigation.

VII. ANALYTICAL INVESTIGATION

In order to simplify analysis and calculation,

- The MR fluid is assumed to be incompressible;
- Body forces such as gravity are ignored, and
- Variables (pressure, strain, stress, etc.) along axial direction are treated as constant.

Under these assumptions, in the oil film coordinates system shown in Figure 1.

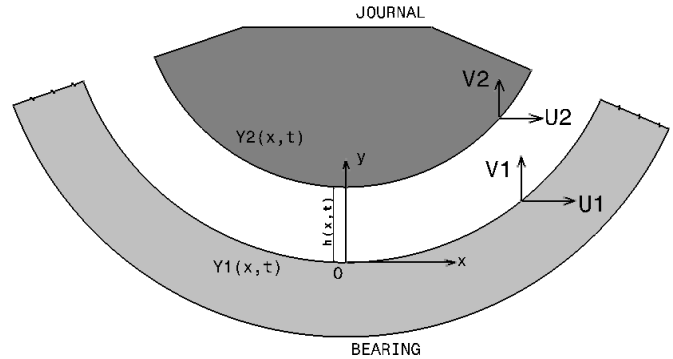

Figure 1 - Geometry of part of the oil film of a journal bearing.

The continuity and momentum equations of the lubricants can be written as:

$$\frac{\partial u}{\partial x} + \frac{\partial u}{\partial y} = 0, \qquad \frac{dp}{dx} = \frac{d\tau}{dy} \tag{1}$$

where $u(x, y)$ is the velocity profile, $P(x)$ is the fluid pressure, $\tau\ (x, y)$ is the shear stress, and x, y are directions defined in the oil film as explained in Figure 1. Boundary conditions are:

$$\begin{aligned} U(x, Y1, t) &= U1, \qquad U(x, Y2, t) = U2, \\ V(x, Y1, t) &= V1, \qquad V(x, Y2, t) = V2, \end{aligned} \tag{2}$$

In which subscripts 1 and 2 denote the inner surface of the bearing and the surface of the shaft, respectively, and $Y(x, t)$ is the "y" coordinates of the boundary surface.

Integrating the momentum equation with respect to y, the following equations are obtained:

$$(y - Y1)\frac{dP}{dx} = \tau - \tau_1, \qquad (Y1 - y)\frac{dp}{dx} = \tau_2 - \tau. \tag{3}$$

On the other hand, integrating the momentum equation from surface 1 to surface 2, the relationship between τ_1 and τ_2 can be found:

$$\frac{dP}{dx} = \frac{\tau_2 - \tau_1}{h} \tag{4}$$

Where $h(x, t)$ is the thickness of the gap between the two surfaces. Equations (1), (3) and (4) apply to both liquid and core regions.

The Herschel-Bulkley model can be represented as:

$$\tau = \tau_0 + K\,\frac{du^n}{dy} \tag{5}$$

Where τ is the shear stress, τ_0 is the yield stress, du/dy is the shear rate, and K, n are model constants.

If $n = 1$, Equation (4) becomes the expression of Bingham model with K the viscosity; if $n > 1$, the fluid is shear thickening; if $n < 1$, the fluid is shear-thinning. According to Equation (5), in the pre-yield region, τ is multi-valued, which may introduce mathematical difficulties. Hewitt and Balmforth [6] introduced a way to avoid this by using the inverse of Equation. (5):

$$\frac{du}{dy} = \left(\left|\frac{\tau}{K}\right| - \frac{\tau_0}{K}\right)^{\frac{1}{n}} sgn\,(\tau) \tag{6}$$

Now, simplifying the equation (6), by introducing the Bingham number,

$$B = \frac{\tau_0}{\tilde{\tau}} = \frac{\tau_0\, h}{\rho\vartheta\, U}, \qquad \rho\vartheta = \frac{K\, U^{n-1}}{h^{n-1}} \tag{7}$$

Bingham number (B) is defined as the ratio of yield stress to viscous stress, so now equation (6) become,

$$\frac{du}{dy} = \Gamma(\tilde{\tau}) = (|\tau| - B)^{\frac{1}{n}}\, sgn\,(\tau) \tag{8}$$

By integrating equation (8) using boundary conditions equation (2) leads to:

$$U = U_2 - U_1 = \int_{Y_1}^{Y_2} \frac{du}{dy}\, dy = \frac{1}{dP/dx}\int_{\tau_1}^{\tau_2} \Gamma\,(\check{\tau})\, d\check{\tau} \tag{9}$$

Integrating Equation (1) with respect to y then to x, the following equation is obtained:

$$Q(t) = \int_{Y_1}^{Y_2} u\, dy + \int_0^{\bar{x}} \frac{\partial h\,(\bar{x}\,, t)}{\partial t} d\bar{x}$$
$$= \frac{1}{2}\int_{Y_1}^{Y_2} (\,Y_2 + Y_1 - 2\,y)\frac{\partial u}{\partial y}\, dy + q(\bar{x}\,, t) \tag{10}$$

Where Q is flux at $\bar{x} = 0$, and:

$$q(\bar{x}, t) = \int_0^{\bar{x}} \frac{dh}{dt}\, dx + \frac{1}{2}\,(U_2 - U_1) \tag{11}$$

By solving Equations (9), (10) and (11), we get

$$\frac{U}{h} = \frac{n\,(s_2\,\sigma_2^{\frac{n+1}{n}} - s_1\,\sigma_1^{\frac{n+1}{n}})}{(n+1)[(s_2 - s_1)B + s_2\sigma_2 - s_1\sigma_1\,]} \tag{12}$$

$$\frac{2(n+1)}{nh^2}(Q - q) = \frac{n\left(s_2\,\sigma_2^{\frac{2n+1}{n}} - s_1\,\sigma_1^{\frac{2n+1}{n}}\right)}{(2n+1)[(s_2 - s_1)B + s_2\sigma_2 - s_1\sigma_1]^2}$$
$$- \frac{(\sigma_2^{\frac{n+1}{n}} - \sigma_1^{\frac{n+1}{n}})}{[(s_2 - s_1)B + s_2\sigma_2 - s_1\sigma_1\,]} \tag{13}$$

Where

$\sigma_1 = |\tau_1| - B\,,\ \sigma_2 = |\tau_2| - B\,,$

$s_1 = sgn(\tau_1),\ s_2 = sgn(\tau_2),$

By defining the Reynolds boundary conditions, the pressure can be determined for given value of Q, Reynolds boundary states that at some point in the oil film (somewhere near the minimum oil film thickness), the pressure gradient and pressure reduce to zero simultaneously, and the negative pressure region is simply set to zero pressure. The Reynolds boundary condition, therefore, can be represented as:

$$\int_D \frac{dy}{dx} d\bar{x} = \int_D \frac{\tau_2 - \tau_1}{h} = 0$$

$$\begin{cases} \dfrac{1}{h(\bar{x}_0)}\big(\tau_2(\bar{x}_0) - \tau_1(\bar{x}_0)\big) = 0 \\ \displaystyle\int_0^{\bar{x}} \frac{1}{h(\bar{x}_0)}\big(\tau_2(\bar{x}_0) - \tau_1(\bar{x}_0)\big) d\bar{x} = 0 \end{cases} \tag{14}$$

In the above equation (14), $\bar{x}_0$ denotes the point at which both pressure and pressure gradient are zero. Equation (14) introduce two new equations and a new unknown variable $\bar{x}_0$. Now Equation (12), (13) along with Equation (14) can be solved for $\tau_1, \tau_2, Q\ and\ \bar{x}_0$. The variation of oil film thickness is crucial for the formation of hydrodynamic pressure. With journal center eccentricity e, the film thickness h takes the form:

$$h = c_b(1 + e\cos\theta\,) \tag{15}$$

VIII. EXPERIMENTAL PROCEDURE

For experimental verification, the bearings dimensions are taken as:

Journal Radius	= R_j = 0.03m
Length of bearing	= B_L=0.06m
Clearance	= c_b= 9 × 10^{-5}m
Herschel-Bulkley model parameter	= K= 42 × 10^{-3}
Speed	= 500 R.P.M.

The rest of the fluid properties are taken from supplier of Lord MRF-132 fluid.

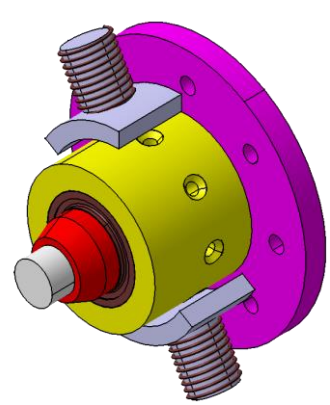

Figure 2 – Cad model concept of Magneto-Rheological fluid bearing.

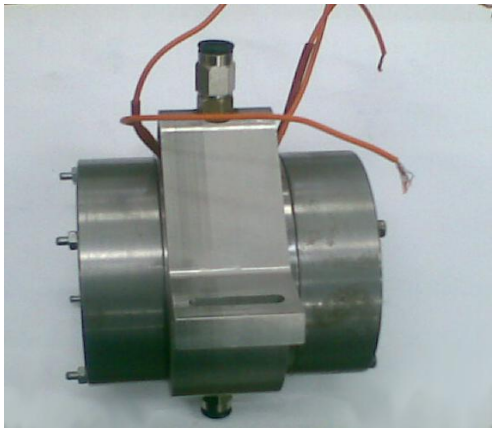

Figure 3 - Magneto-Rheological fluid bearing in assemble condition.

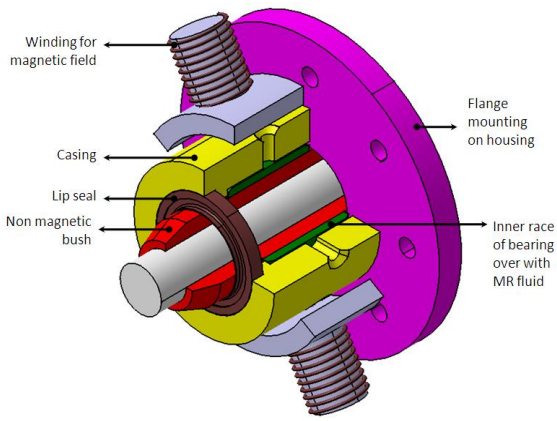

Figure 4 - Cross sectional view of MR fluid bearing.

As shown in Figure 4, the bearing is mounted by using flange, the magnetic winding is supported on different frame (which is not shown here), the lip seal is provide on both side to avoid leakage and intrusion of foreign particles into MR fluid. The MR fluid is supplied by the Perealistic pump at pressure of 1×10^5 to 3×10^5 Pa.

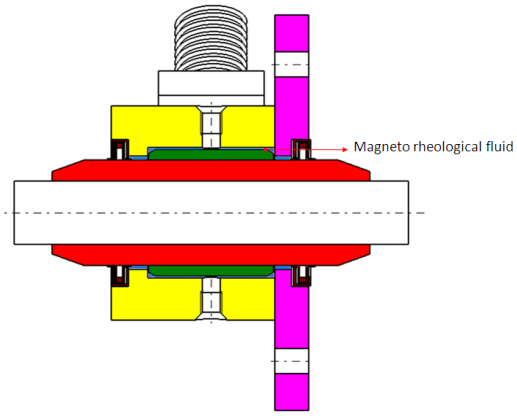

Figure 5 – Magnetorheological fluid in Bearing.

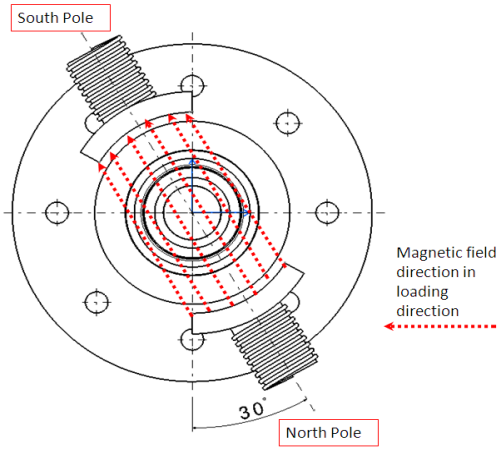

Figure 6 – Magnetic field direction along the attitude angle, so that magnetic particle aligns in loading direction.

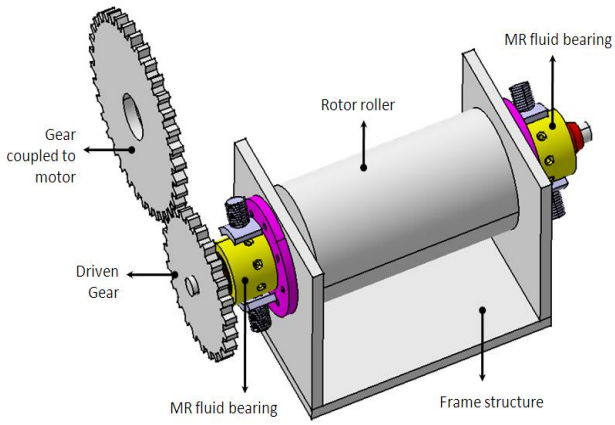

Figure 7- Experimental set up for the MR fluid bearing (Indicative arrangement of actual experiment set up)

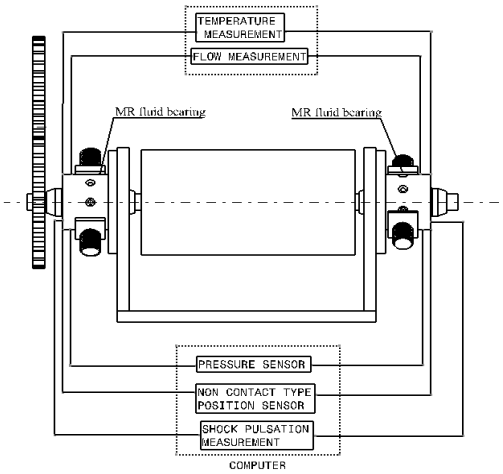

Figure 8 – Typical arrangement of all the sensors.

The existing hydrodynamic bearing set up is used for testing, as shown in Figure 7, on the frame two hydrodynamic bearings are mounted for testing. The same working forces,

which are acting on oil used hydrodynamic bearing, are also acting MR fluid bearing. All the data measured from different sensors (as shown in Figure -8) feed to the computer for analysis. The MR fluid bearing is mounted on the rotor shaft which is used for generation of pneumatic power, all the data measured on test rig which is used for testing particular bearings and equipments only.

IX. Results and Discussions

The equations mentioned in numerical investigation are solved numerically. First, Equations (12) and (13) are solved for τ_1 and τ_2 using assumed flux Q. Then Q is solved iteratively based on Reynolds boundary condition Equations (14), where $\bar{x}_0$ is the point at which $\tau_1 = \tau_2$. Every value of Q is used to solve Equation (12) and (13) in the first step and the iteration goes on. When the values all four unknowns are converged, the static condition of the bearing is determined. Investigation of bearing with constant load is also carried out by finding out suitable eccentricity and attitude angle. Therefore when $Q, \tau_1, \tau_2, \bar{x}_0$ are determined. The selection of values of parameters K, n and τ_0 in the HB model results in models of Newtonian fluid (n = 1 , τ_0 = 0), Bingham fluid (n = 1 , $\tau_0 > 0$) and viscoplastic fluid ($0 < n < 1, \tau_0 > 0$). In the Newtonian fluid model, K is actually the dynamic viscosity. For reference, the value of K is set to 42×10^{-3} from the Lord MRF-132 technical data [20] in the above three models. From the given dimension of bearing, the analytical values are calculated for shear stress and pressure at different eccentricities when n=0.75.

Eccentricity ratio	Speed (R.P.M.)	τ_1 (N/m^2)	τ_2 (N/m^2)	Pressure (Pa)
0.2	500	4	-0.5	5
0.8	500	12	-6	50

Table 1- Analytical data of shear stresses, pressure for different eccentricity ratios.

From the table 1 analytical data, the pressure curve is plotted along the circumference. The comparison between analytical pressure curve and experimental pressure curve are as follows: the values of pressure gradient are derived from pressure sensor readings.

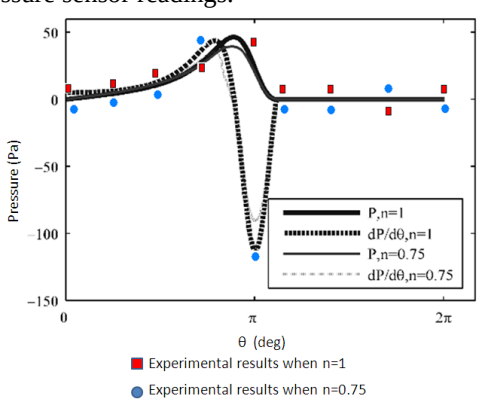

Figure 9 – Oil film pressure variation along the circumference when eccentricity ratio e=0.8.

The experimental values are taken by pressure sensor at eight different locations. By increasing the electromagnetic field current the yield stress value τ_0 get increased, and its very helpful to study the effect of yield stress on pressure. Following table shows the effect of yield stress on pressure when other parameter remains constant, For Speed N=500 R.P.M., Eccentricity ratio e=0.5, and n=0.75. All the readings are taken after 30min running and stabilization of the bearing.

Yield stress (Pa)	Analytical Pressure (MPa)	Experimental Pressure (MPa)
100	3.15	2.9
200	3.28	3.4
300	3.48	3.5
400	3.62	3.4
500	3.80	3.9
600	4.05	4.2
700	4.23	4.1
800	4.41	3.9
900	4.59	4.6
1000	4.8	4.7

Table 2 – Effect of yield stress variation on Pressure.

All the experimental data are within accuracy of +/-15 percent to analytical values.

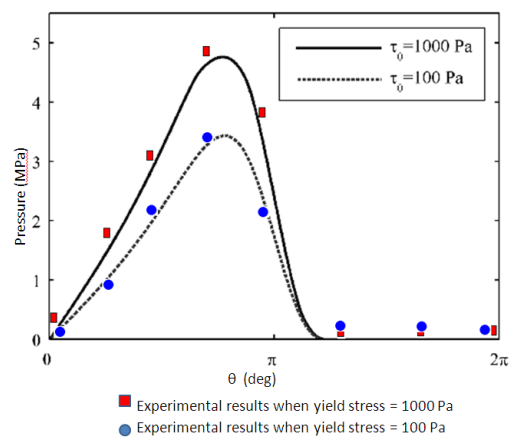

Figure 10 - Oil film pressure variation for different values of yield stress along the circumference for eccentricity ration e=0.5

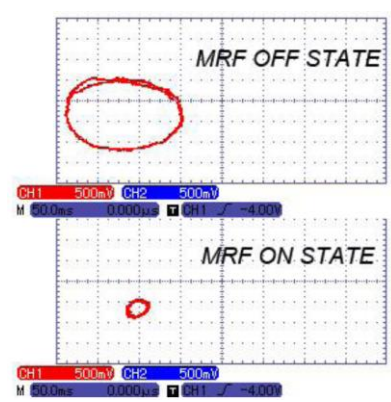

Figure 11 – Journal orbit position from position sensor data when MRF state effect is on and off.

On the shaft end the point is marked, and during the running condition, its position is absorbed when magnetorheological (MRF) state is on and off, by means of position sensor, from figure 11, it is clear that, the shaft become stable when MRF state is on.

X. Conclusion

As the yield stress values varies, the apparent viscosity changes, and ultimately the load carrying capacity of the bearing increases. When there is no hydrodynamic action during starting and stopping, by increasing the yield stress values, the load get supported. Also, during the running condition, if viscosity decreases, due to temperature rise, by increasing the yield stress, the working dynamic load get supported. During the testing, higher values of yield stress during starting, there is no metal to metal contact, as there is no signal from shock pulsation measurement. This way we can conclude that the Magneto rheological Fluid bearing life having longer life than conventional hydrodynamic bearing.

References

[1] *Nikolakopoulos P., Papadopoulos C. Controllable high speed journal bearings, lubricated with electro-rheological fluids: an analytical and experimental approach. Tribology International, Vol. 31, Issue 5, 1998, p. 225-234.*

[2] *Zhang Z., Zhu K.-Q. Characteristics of electrorheological fluid flow in journal bearings. Chinese Physics Letters, Vol. 19, Issue 2, 2002, p. 273-275.*

[3] *Bompos D., Nikolakopoulos P. CFD simulation of magnetorheological fluid journal bearings. Simulation Modelling Practice and Theory, Vol. 19, Issue 4, 2011, p. 1035-1060.*

[4] *Gertzos K. CFD analysis of journal bearing hydrodynamic lubrication by Bingham lubricant. Tribology International, Vol. 41, Issue 12, 2008, p. 1190-1204.*

[5] *Hesselbach J., Abel-Keilhack C. Active hydrostatic bearing with magnetorheological fluid. Journal of Applied Physics, Vol. 93, Issue 10, 2003, p. 8441-8843.*

[6] *Hewitt I. J., Balmforth N. J. Viscoplastic lubrication theory with application to bearings and the washboard instability of a planing plate. Journal of Non-Newtonian Fluid Mechanics, Vols. 169-170, 2012, p. 74-90.*

[7] *Tichy J. Hydrodynamic lubrication theory for the Bingham plastic flow model. Journal of Rheology, Vol. 35, Issue 4, 1991, p. 477-496.*

[8] *Wada S., Hayashi H., Haga K. Behavior of a Bingham solid in hydrodynamic lubrication. Bulletin of the JSME, Vol. 16, Issue 92, 1973, p. 422-431.*

[9] *Cohen G., Oren J. Film pressure distribution in grease lubricated journal bearing. Transactions of ASME, Vol. 71, 1949, p. 555.*

[10] *Milne A. A theory of rheodynamic lubrication. Kolloid, Vol. 139, 1954, p. 96-100.*

[11] *Kim J., Seireg A. Thermohydrodynamic lubrication analysis incorporating Bingham rheological model. Journal of Tribology, Vol. 122, 2000, p. 137-146.*

[12] *Zhang C. TEHD behavior of Non-Newtonian dynamically loaded journal bearings in mixed lubrication for direct problem. Journal of Tribology, Vol. 124, 2002, p. 178-185.*

[13] *Bouyahia F., Hajjam M. Three-dimensional non-Newtonian lubricants flows in sector-shaped, tilting-pads thrust bearings. Proceedings of the Institution of the Mechical Engineers, Part J: Journal of Engineering Tribology, Vol. 220, Issue 4, 2006, p. 375-384.*

[14] *Urreta H., Leicht Y., Sanchey A. Hydrodynamic bearing lubricated with magnetic fluids. Journal of Intelligent Material Systems and Structures, Vol. 21, 2010, p. 1491-1499.*

[15] *Průša V., Rajagopal K. R. Flow of an electrorheological fluid between eccentric rotating cylinders. Theoretical and Computational Fluid Dynamics, Vol. 26, Issues 1-4, 2012, p. 1-21.*

[16] *Becnel A., Hu W., Wereley N. Measurement of magnetorheological fluid properties at shear rates of up to 25000 s-1. Magnetics IEEE Transactions, Vol. 48, Issue 11, 2012, p. 3525-3528.*

[17] *Wang X., Gordaninejad F. Study of magnetorheological fluids at high shear rates. Rheologica Acta, Vol. 45, Issue 6, 2006, p. 899-908.*

[18] *Wang X., Gordaninejad F. Flow analysis of field-controllable electro- and magneto-theological fluids using Herschel-Bulkley model. Journal of Intelligent Mater Systems and Structures, Vol. 10, Issue 8, 1999, p. 601-608.*

[19] *Amalraj I. Inertia effects in an externally pressurized thrust bearing using Herschel-Bulkley lubricants. American Journal of Computational and Applied Mathematics, Vol. 2, Issue 3, 2012, p. 79-85.*

[20] *MRF-132 Technical Data. Lord Inc., http://www.lord.com/?action=download&document_id=2558&output=download.*

[21] *Bompos D., Nikolakopoulos P. Experimental and analytical investigations of dynamic characteristics of magnetorheological and nano magnetorheological fluid film journal bearing. Proceedings of ASME nano magnetorheological fluid film journal bearing. Proceedings of ASME*

Sagar N. Bhore is the student of M.E Design Mechanical Engineering Department, Rajarshi Shahu College Of Engineering Tathwade, Pune-33. He is having 14 years of experience in industrial Research and development activities.

Niranjan D. Khaire, Assist.Professor, Department of Mechanical Engineering, Rajarshi Shahu College of Engineering, Tathwade, Pune-33. India.